XM-7628

FID / AAB COMBO BENCH

Owner's Manual

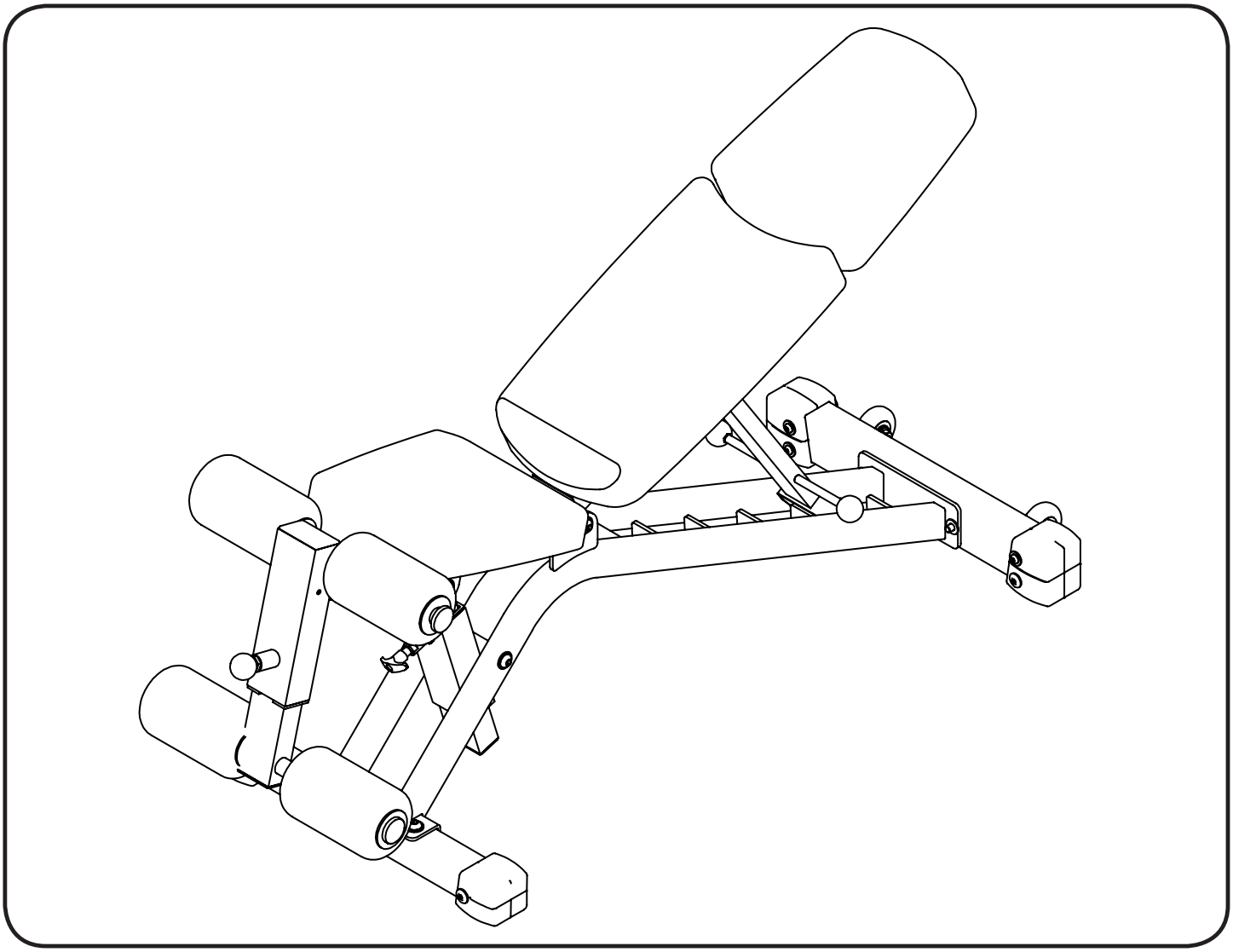

8/09

Table Of Contents

Important Safety Information	3
Before You Start	4
Assembly	5-9
Parts List	10
Exploded View	11
Warranty Information	12

NOTE: Hand tighten bolts and nylon nuts until machine is fully assembled.

Prior to assembly, remove components from the box and verify that all the listed parts were supplied.

SAFETY INFORMATION WARNING!

Before using this unit or starting any exercise program, consult your physician. This is especially important for persons over the age of 35 and/or persons with pre-existing health problems. XMARK Fitness assumes no responsibility for personal injury or property damage sustained by or through the use of this product.

It is the owner's responsibility to ensure that all users of this unit have read the Owner's Manual and are familiar with safety information and precautions.

SAFETY PRECAUTIONS

- This unit should only be used on a level surface and is intended for indoor use only. XMARK Fitness recommends an equipment mat be placed under the unit to protect the floor or carpet and for easier cleaning.
- Wear comfortable, good-quality walking or running shoes and appropriate clothing. Do not use this unit with bare feet, sandals, socks or stockings!
- Always examine your unit before using to ensure all parts are in working order.
- Do not leave children unsupervised near or on the unit.
- Service to your unit should only be performed by an authorized service representative, unless authorized and/or instructed by a XMARK Fitness technician. Failure to follow these instructions will void the warranty.

THANK YOU for making this unit a part of your exercise program. XMARK Fitness assures the very best in value, appearance, durability and biomechanics.

This manual will guide you through the assembly process. If at any time you are having trouble with the assembly or use of this product, then please contact us at our XMARK Fitness help line. We have trained service technicians on site to take care of you, our valued customer.

REGISTRATION CARD

To avoid unnecessary delays in warranty parts and to insure that a permanent record of your purchase is on file with our company, be sure to send in the warranty registration card or register online at www.xmarkfitness.com within 10 days of purchase.

MAILING ADDRESS

XMARK Fitness
7501 Trammel Drive
Shreveport, LA 71108

QUESTIONS?
CALL 1-800-719-4605
Monday-Friday
8:30 a.m.-5:00 p.m.
(Central Standard Time)

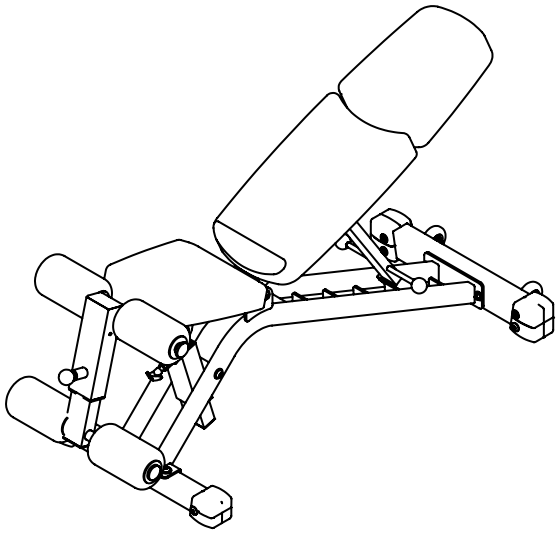

XMARK FITNESS SERIES
MODEL: XM-7628

When calling please have the following product information available:

Model Name :

Date Mfg.:

Serial #

Model Name Decal Location

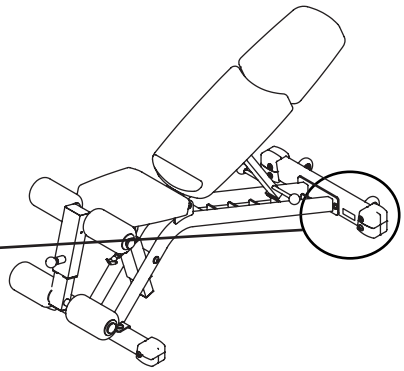

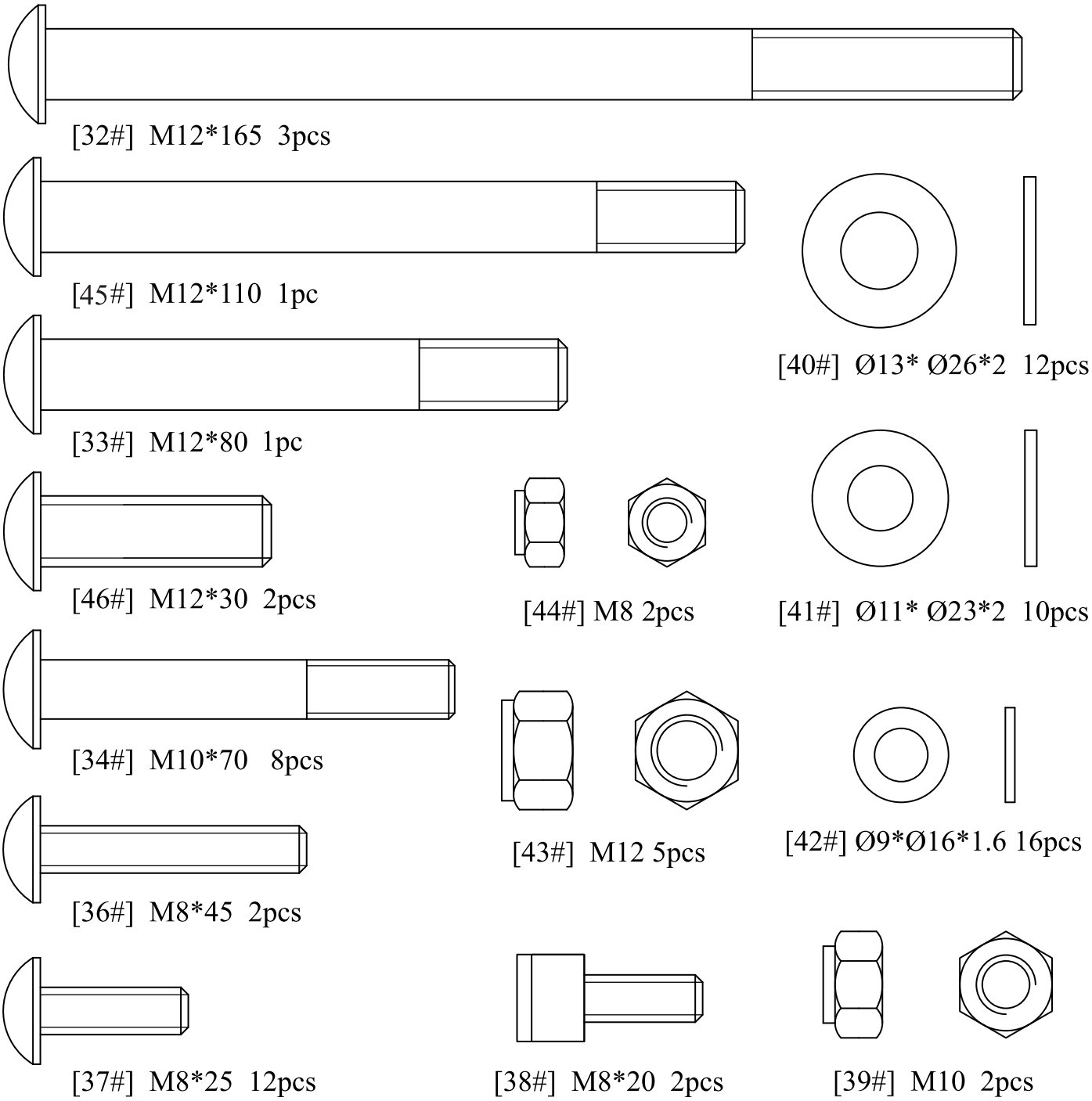
[32#] M12*165 3pcs
[45#] M12*110 1pc
[40#] Ø13* Ø26*2 12pcs
[33#] M12*80 1pc
[46#] M12*30 2pcs
[44#] M8 2pcs
[41#] Ø11* Ø23*2 10pcs
[34#] M10*70 8pcs
[43#] M12 5pcs
[42#] Ø9*Ø16*1.6 16pcs
[36#] M8*45 2pcs
[37#] M8*25 12pcs
[38#] M8*20 2pcs
[39#] M10 2pcs

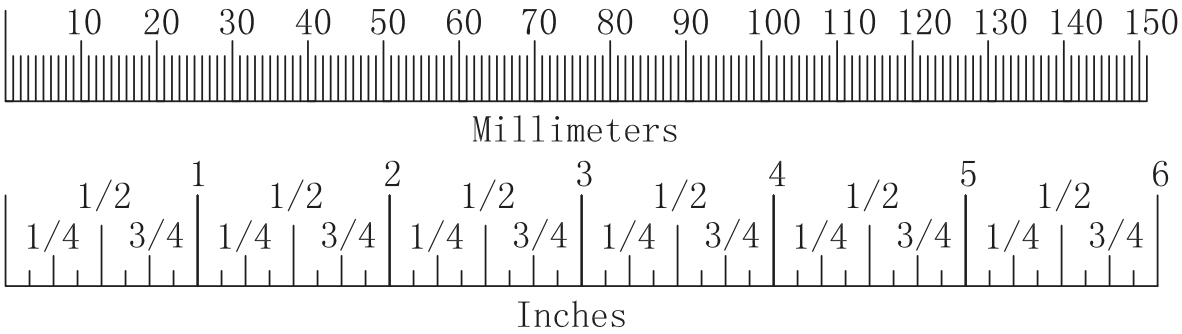
10 20 30 40 50 60 70 80 90 100 110 120 130 140 150
Millimeters
1 2 3 4 5 6
1/2 1/2 1/2 1/2 1/2 1/2
1/4 3/4 1/4 3/4 1/4 3/4 1/4 3/4 1/4 3/4 1/4 3/4
Inches

NOTE: Hand tighten bolts and nylon lock nuts until machine is fully assenbled.

Step 1

Attach Main Frame (#1) to Front Base (#3) using:

- two M12*30 Button Head Cap Screws (#46)
- two Φ13*Φ26*2 Flat Washers (#40)

Attach Rear Base (#2) to Main Frame (#1) using:

- two M10*70 Button Head Cap Screws (#34)
- two M10 Nylon Lock Nuts (#39)
- four Φ11*Φ23*2 Flat Washers (#41)

Attach Frame Sleeve Adjustable Seat Pad (#9) to Main Frame (#1), then Put Frame Adjustable Seat Pad (#8) into Frame Sleeve Adjustable Seat Pad (#9) using:

- one M12*165 Button Head Cap Screw (#32)
- one M12 Nylon Lock Nut (#43)
- two Φ13*Φ26*2 Flat Washers (#40)
- one Socket Head Cap Screw M8*20 (#38)

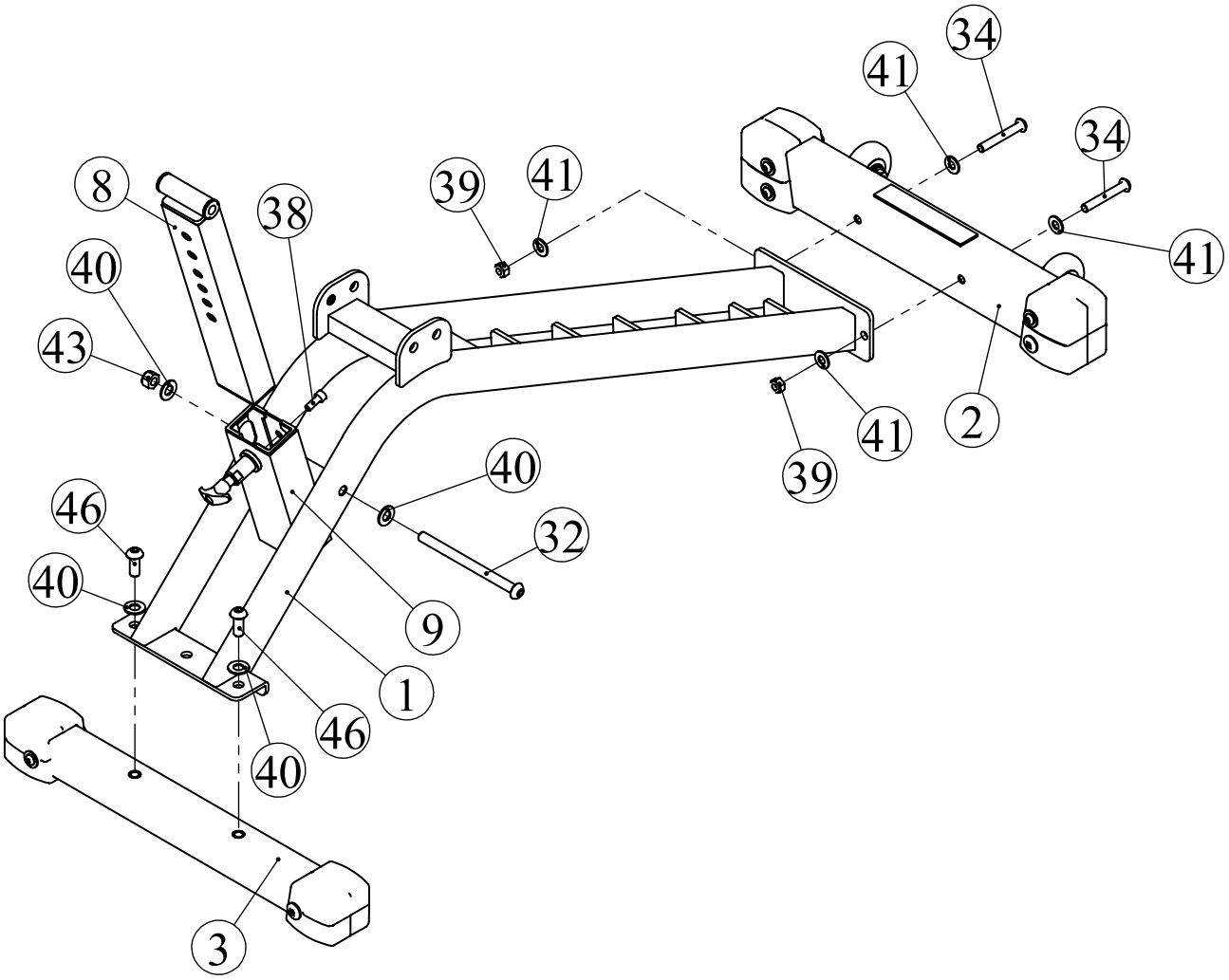

NOTE: Wrench tighten bolts and nylon lock nuts.

Step 2

Attach Frame Seat Pad Support (#5) to Main Frame (#1) using:

- one M12*165 Button Head Cap Screw (#32)
- one M12 Nylon Lock Nut (#43)
- two Φ13*Φ26*2 Flat Washers (#40)

Attach Frame Adjustable Back Pad (#6) to Frame Back Pad Support (#5) using:

- one M12*80 Button Head Cap Screw (#33)
- one M12 Nylon lock Nut (#43)
- two Φ13*Φ26*2 Flat Washers (#40)

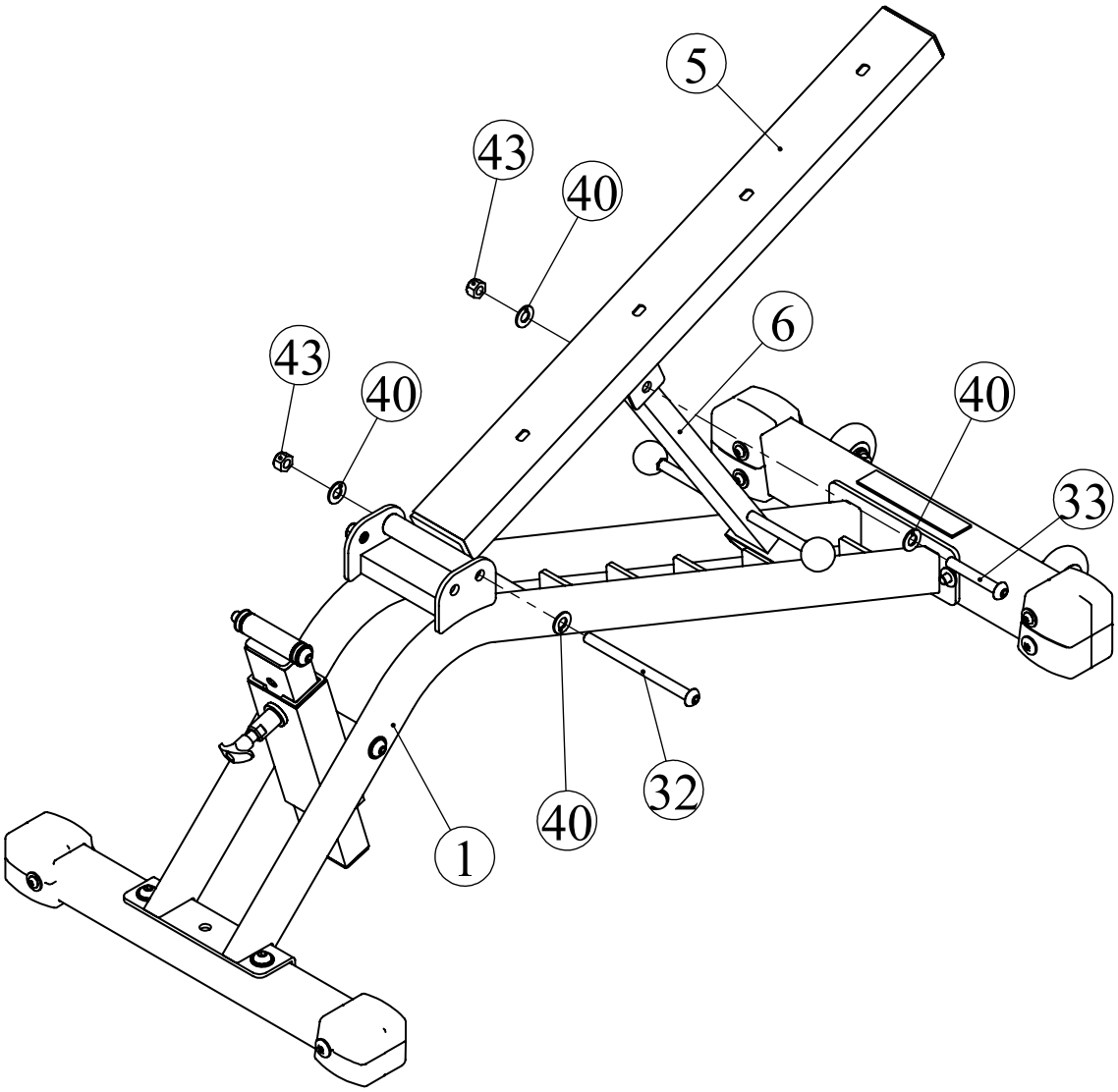

NOTE: Wrench tighten bolts and nylon lock nuts.

Step 3

Attach Frame Seat Pad Support (#4) to Main Frame (#1) using:

- one M12*165 Button Head Cap Screw (#32)
- one M12 Nylon Lock Nut (#43)
- two Φ13*Φ26*2 Flat Washers (#40)

Attach Foam Frame (#7) to Frame Seat Pad Support (#4) using:

- one Socket Head Cap Screw M8*20 (#38)

Attach Frame Adjustable Seat Pad (#8) to Frame Seat Pad Support (#4) using;

- one M12*110 Button Head Cap Screw (#45)
- one M12 Nylon lock Nut (#43)
- two Φ13*Φ26*2 Flat Washers (#40)

Attach Foam Tube (#17) to Frame Seat Pad Support (#4).

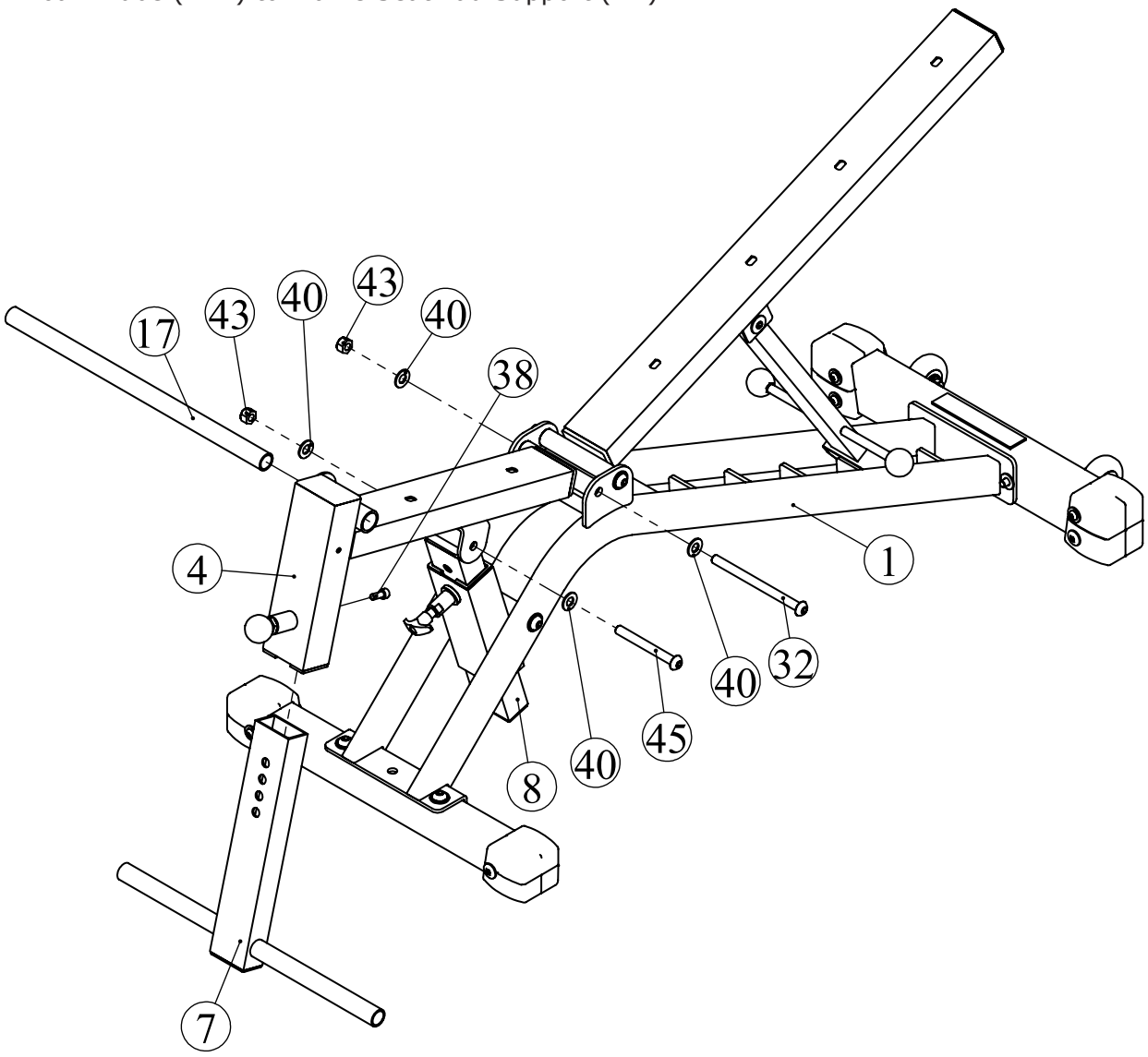

NOTE: Wrench tighten bolts and nylon lock nuts.

Step 4

Attach Upper Back Pad (#12) and Lower Back Pad (#13) to Frame Back Pad Support (#5) using:

- four M10*70 Button Head Cap Screws (#34)
- four Φ11*Φ23*2 Flat Washers (#41)

Attach Seat Pad (#14) to Frame Seat Pad Support (#4) using:

- two M10*70 Button Head Cap Screws (#34)
- two Φ11*Φ23*2 Flat Washers (#41)

Attach four Foam Paddings Φ110*Φ22*180 (#47) to Foam Tube (#10), Foam Frame (#7) using:

- eight Plastic Washers (#23)
- four Metal End Caps (#48)

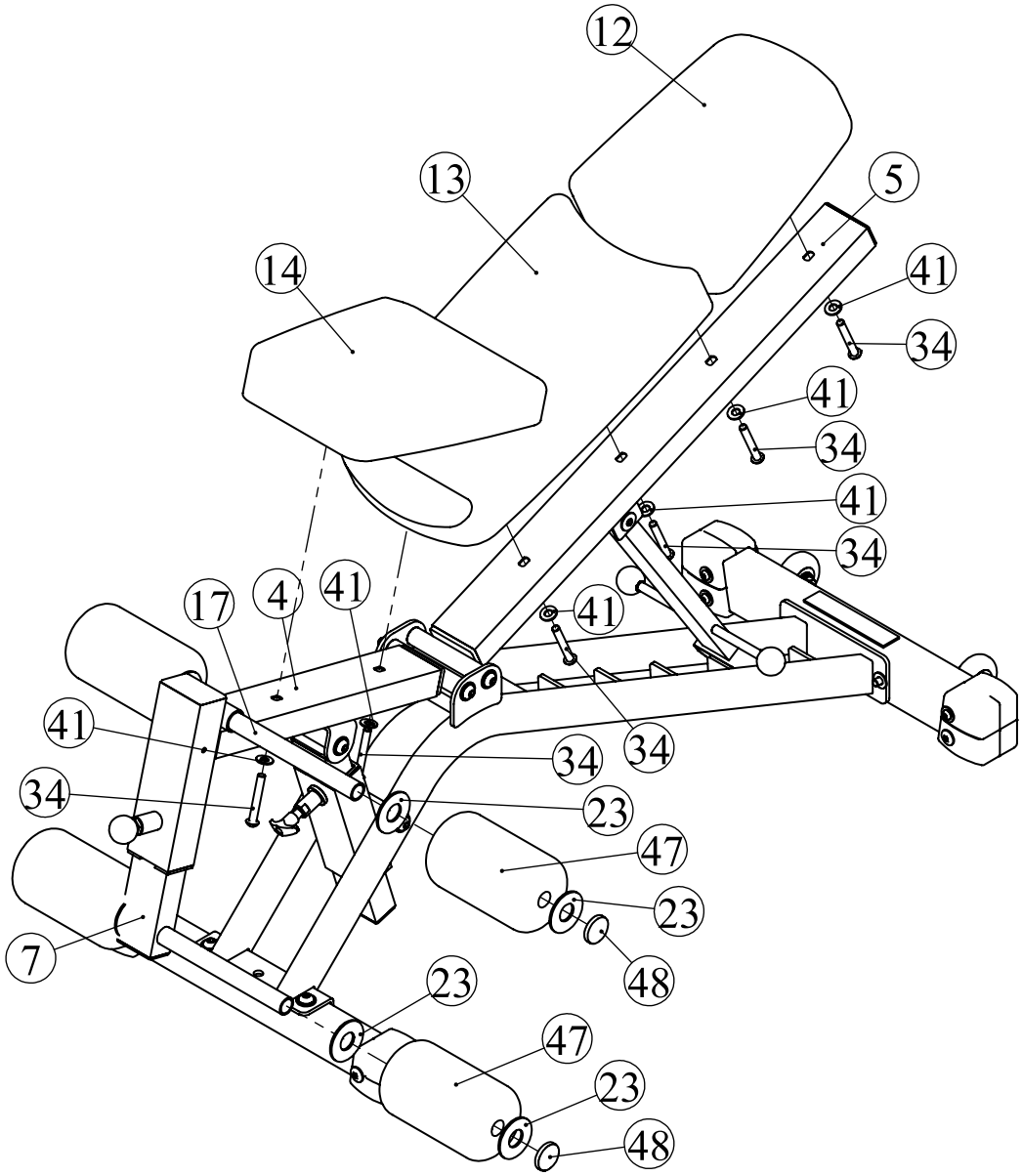

XM-7628 Parts List

Ref #	Part #	Description	Qty
1	P00771	Main Frame	1
2	P00772	Rear Base	1
3	P00773	Front Base	1
4	P00774	Frame Seat Pad Support	1
5	P00775	Frame Back Pad Support	1
6	P00776	Frame Adjustable Back Pad	1
7	P00721	Foam Frame	1
8	P00777	Frame Adjustable Seat Pad	1
9	P00778	Frame Sleeve Adjustable Seat Pad	1
10	P00779	Shaft	1
11	P00780	Nylon Spacer	1
12	P00048	Upper Back Pad XM Series	1
13	P00051	Lower Back Pad XM Series	1
14	P00722	Seat Pad	1
15	P00573	Iron Bushing, 25*12.2*8	10
16	P00138	Glide Sleeve	4
17	P00109	Foam Tube, XM-8660	1
18	P00023	Handle Ball	2
19	P00248	Plug 40*80	1
20	P00249	Plug, 50.8*76.2	1
21	P00152	Foot Cap 2, Right 50.8*76.2, XM Series	2
22	P00155	Foot Cap, Left 50.8*76.2 XM Series	2
23	P00140	Plastic Washer	8
24	P00153	Foot Cap, Right 50.8 XM Series	2
25	P00154	Foot Cap, Left 50.8 XM Series	2
26	P00586	RUBBER PAD	1
27	P00030	Wheel	2
28	P00004	Spacer	4
29	P00203	Pop Pin XM Series	1
30	P00663	Long Pop Pin XM Series	1
31	P00202	Plug 38*63.5	2
32	P00770	Button Head Cap Screw M12*165	3
33	P00626	Button Head Cap Screw M12*80	1
34	P00610	Button Head Cap Screw M10*70	8
35	P00768	External Retaining Ring Φ12	2
36	P00639	Button Head Cap Screw M8*45	2
37	P00636	Button Head Cap Screw M8*25	12
38	P00708	Socket Head Cap Screw M8*20	2
39	P00561	Nylon Lock Nut M10	2
40	P00035	Flat Washer Φ13*Φ26*2	12
41	P00032	Flat Washer Φ11*Φ23*2	10
42	P00136	Flat Washer Φ9*Φ16*1.6	16
43	P00562	Nylon Lock Nut M12	5
44	P00564	Nylon Lock Nut M8	2
45	P00619	Button Head Cap Screw M12*110	1
46	P00769	Button Head Cap Screw M12*30	2
47	P00061	Foam Padding Φ110*Φ22*180 XM SERIES	4
48	P00062	Metal End Cap	4
49	P00560	Hex Key S6	1
50	P00022	Wrench 17-19	1
51	H00043	Hardware	1
52	M00043	Owner's Manual	1

Exploded View

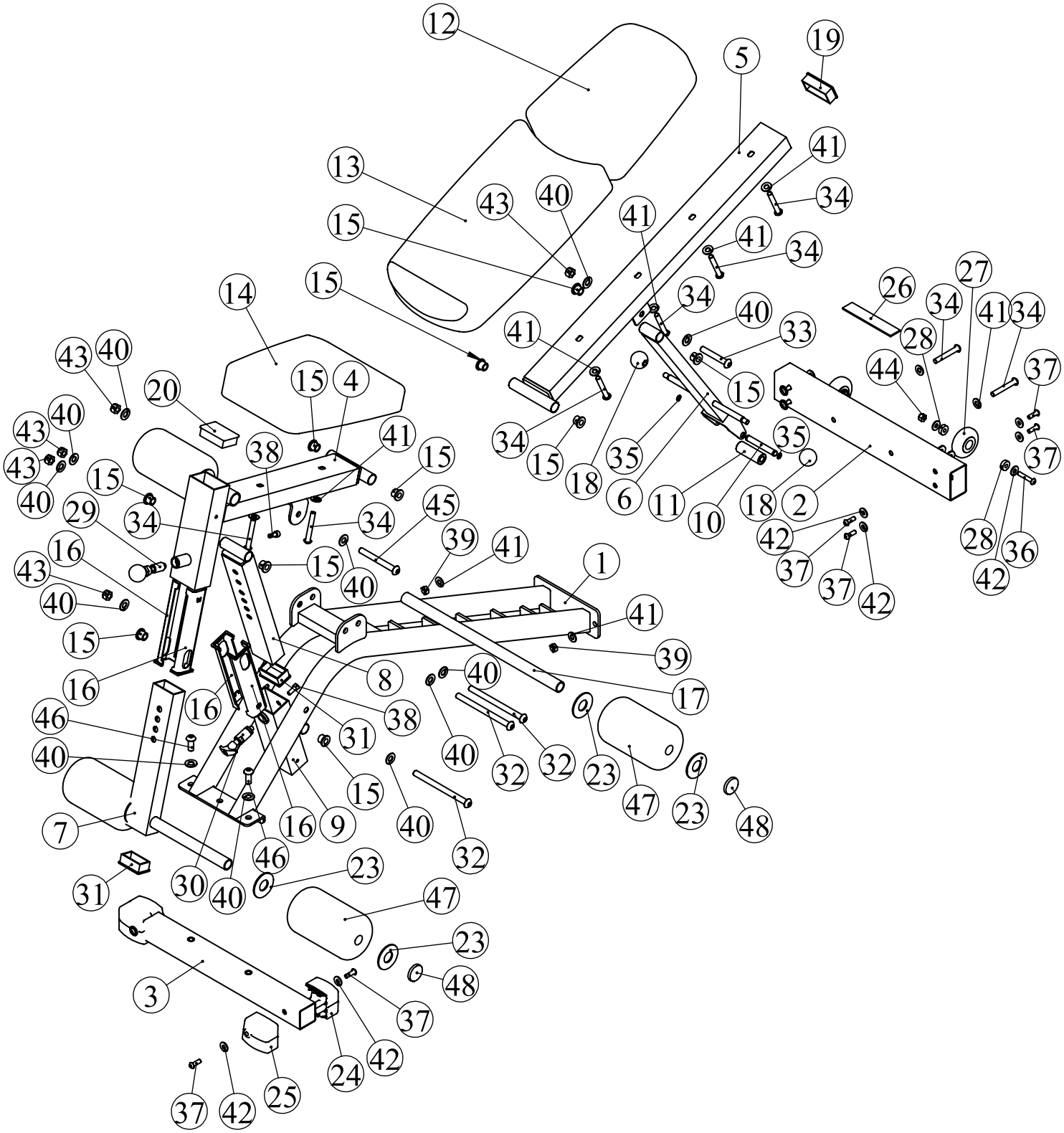

XMARK Fitness

7501 Trammel Drive

Shreveport, LA 71108

Customer Service: 1-800-719-4605